Overview

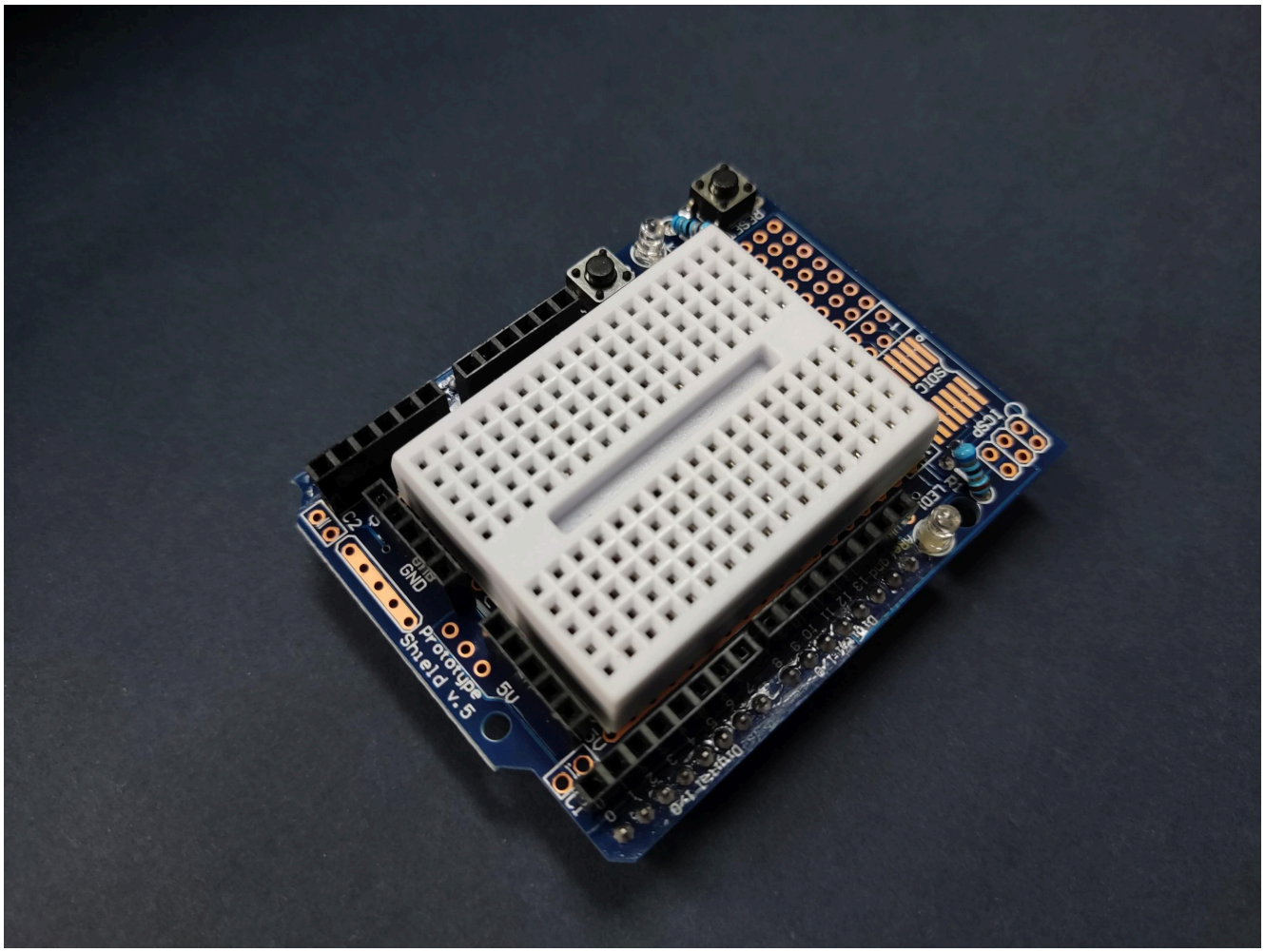

This prototyping shield is the best on the market and now is even better with **Version R3** – updated for the most compatibility with just about all the Arduinos!

It works with UNO, Mega, Leonardo, NG, Diecimila, Duemilanove, and compatible Arduinos. Yun's and Arduino Ethernets have a chunky Ethernet jack that gets in the way of stacking, you can use the stacking headers included and it will work,

just doesn't sit nice and flat.

Check out these awesome specifications:

- It has a nice standard 0.1"x0.1" prototying grid with big pads
- Comes with Stacking headers and plain header, choose whichever you want when soldering together
- A IC pattern for adding DIP ICs up to 20 pins
- Power rails down the middle and sides
- A reset button and an extra general use button
- 2 3mm general use LEDs, red and green, as well as 2 matching resistors
- A pass-thru ICSP stacking header so you can stack any kind of shield on top, and/or use an AVR programmer
- A surface-mount chip area for up to 14 SOIC size parts
- Compatible with tiny breadboards
- Every pin is brought out!
- Gold plated pads

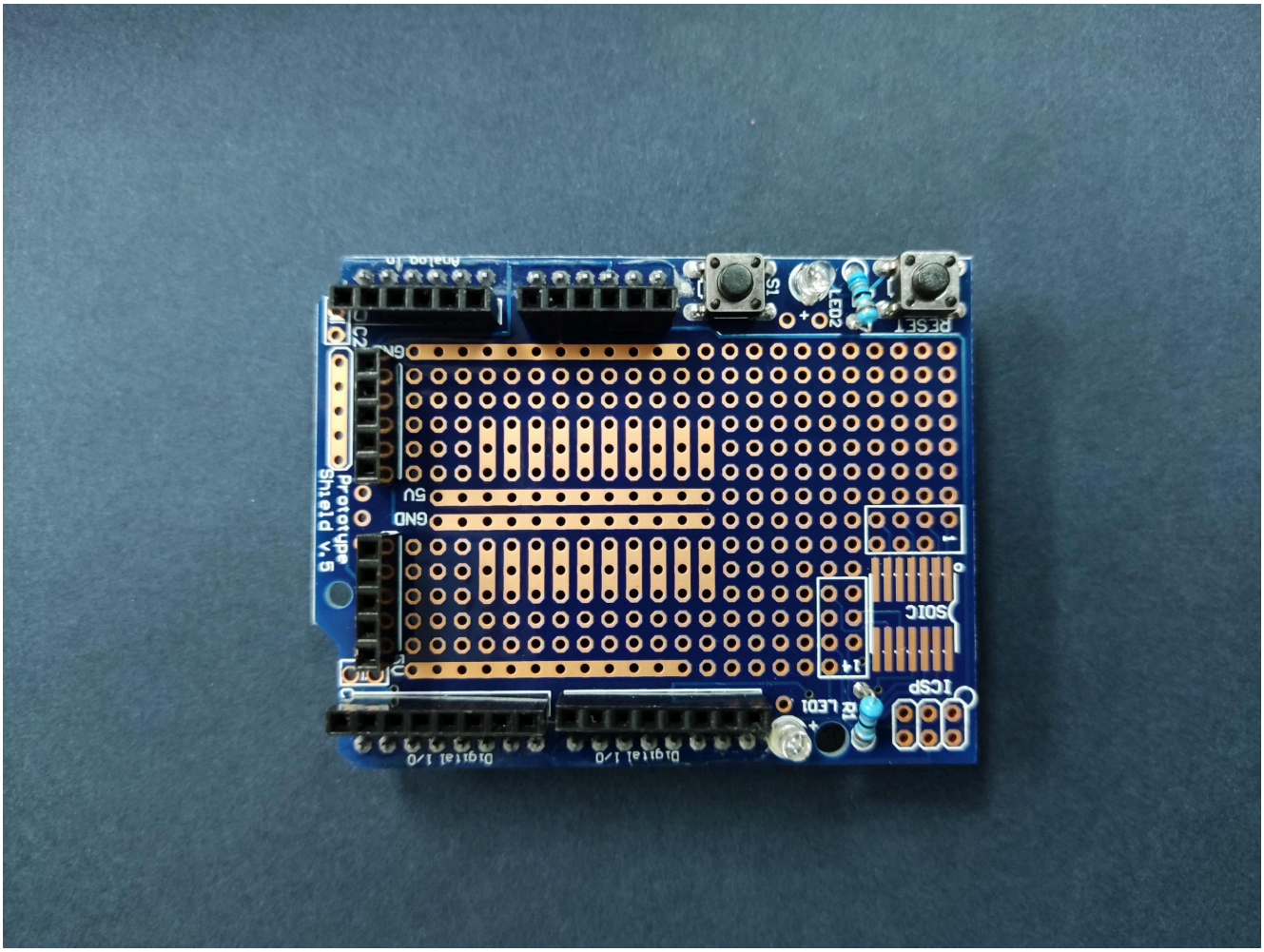
Prototype
Shield v.5
Digital I/O
Digital I/O
ICSP
SOIC
RESET
LED1
LED2
S1
GND
5V

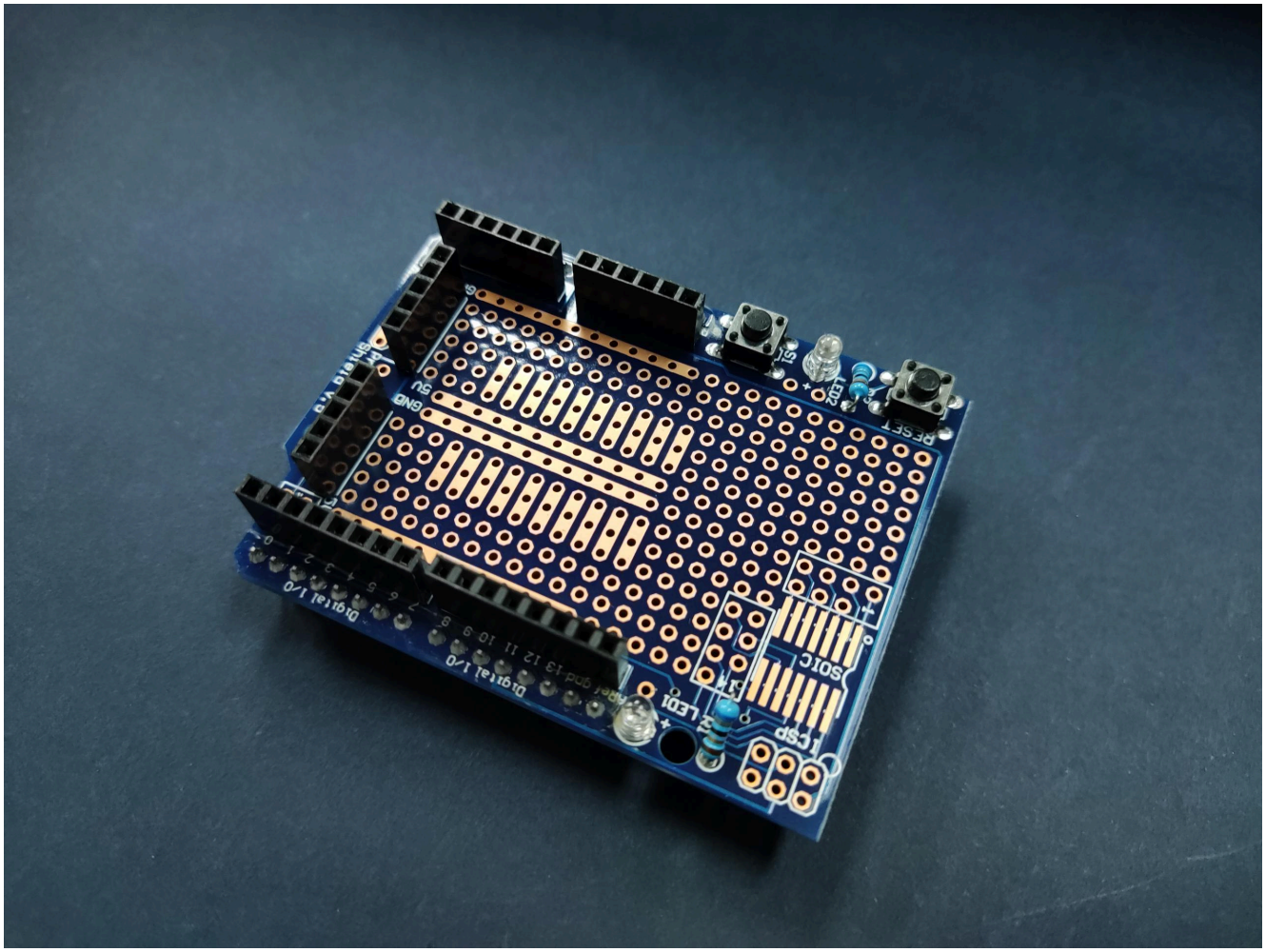
Shield v.5
Digital I/O
Digital I/O
ICSP
SOIC
RESET
LED1
LED2
S1
GND
5V

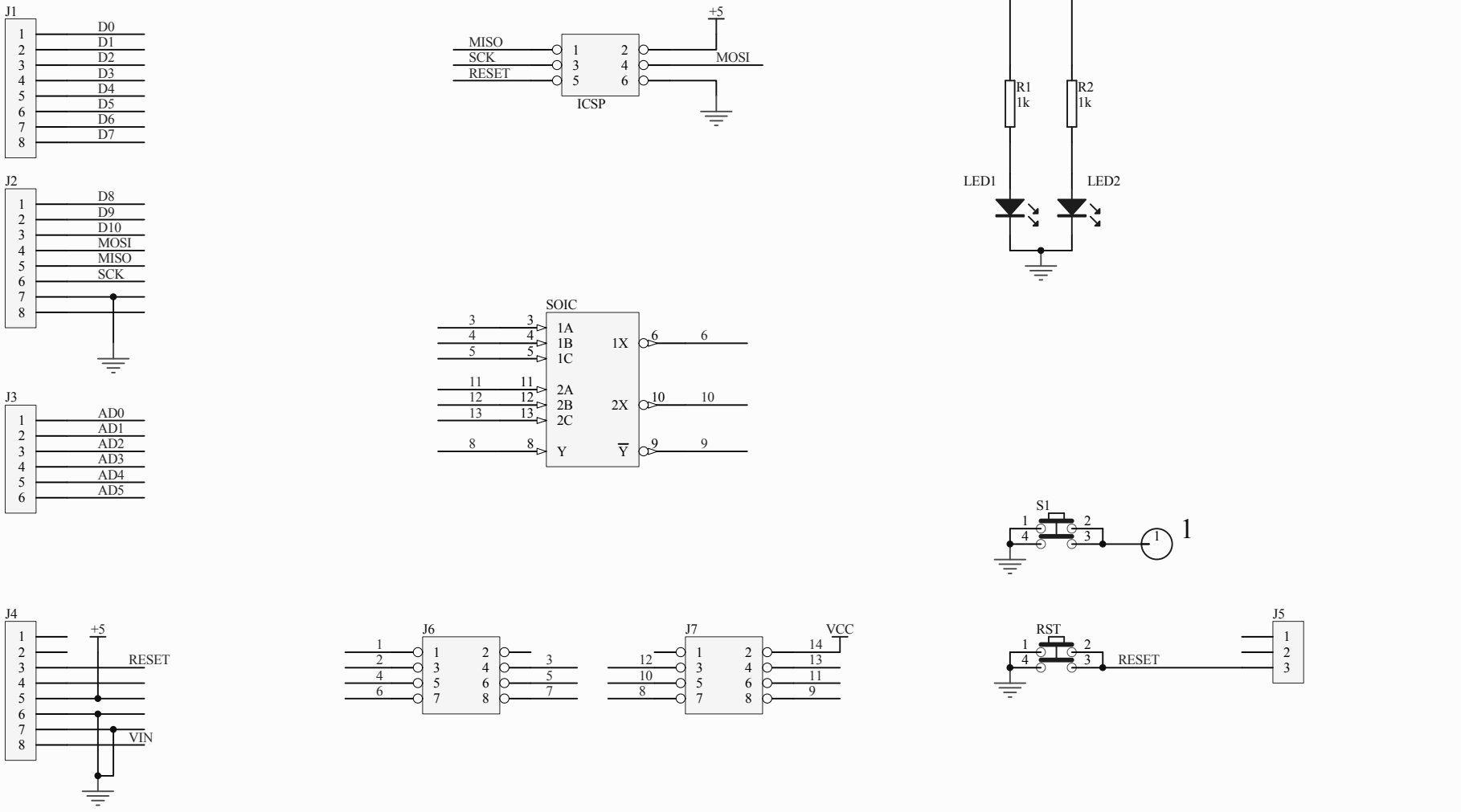

Title	Proto Shield		
Size A4	Number		Revision
Date:	2016/8/9	Sheet of	
File:	D:\产品记录\..\proto shield.Sch	Drawn By:	